Cylinder Vaporizer Electrically Heated Regulator
Outline & Mounting Dimensions

Weight - 26.2 lbs (11.9 kg)

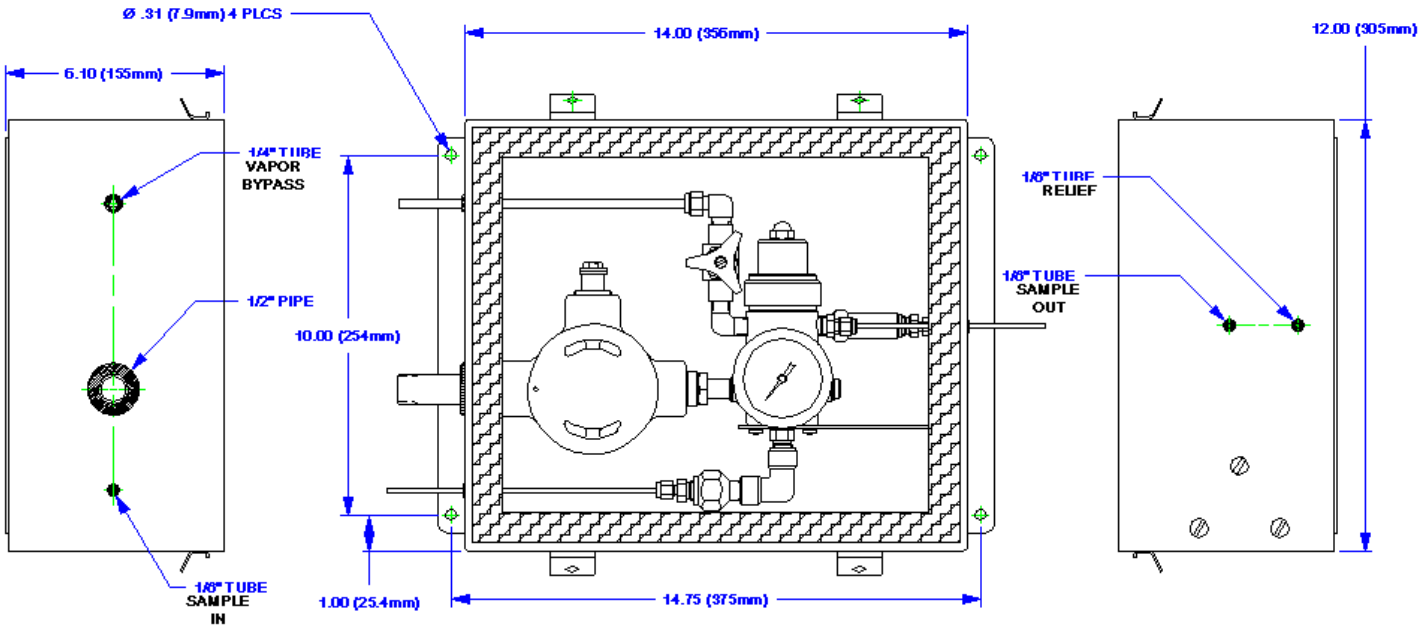

GO Regulator
405 Centura Court • PO Box 4866 • Spartanburg, SC 29303
Phone (864) 574-7966 • Fax (864) 574-5608
www.goreg.com • sales@goreg.com